BLADE 180 CFX HELICOPTER *7075 Triple Bearing Weighted Tail Blade Grip set* INSTRUCTION

MICROHELI CO., LTD.

COPYRIGHT © 2017 MICROHELI®

1 7075 TRIPLE BEARING WEIGHTED TAIL BLADE GRIP SET MH-18FX043BG

Apply Loctite to all screws

M1.4x3mm Phillips Head Screw x2

2mm Ball x4

3mm Ball x2

2x3x1.1mm Aluminum Spacer x2

M1.6mm Brass Nut x2

2x5x1.5mm Radial Bearing x6

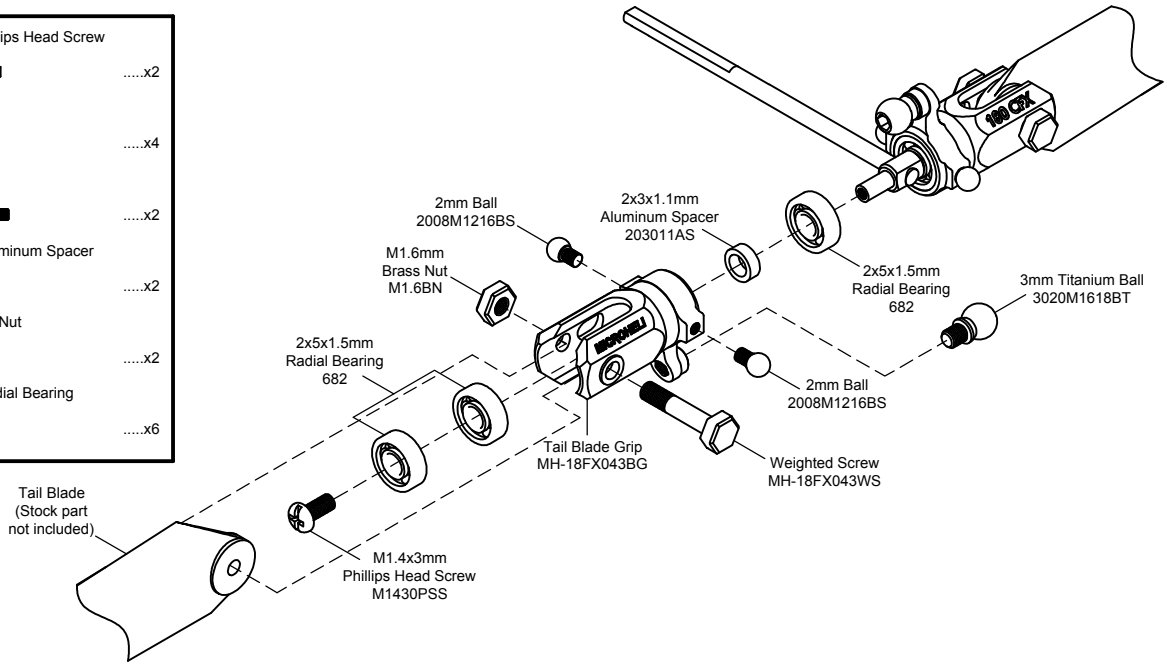

Apply Loctite

CAUTION: Please check your model helicopter carefully before attemp to fly!